DH-HAC-HFW1000S

1Megapixel 720P Water-proof HDCVI IR Bullet Camera

Features

- 1/4" 1Megapixel CMOS
- 25/30fps@720P
- High speed, long distance real-time transmission
- HD and SD switchable
- OSD Menu, control over coaxial cable
- DWDR, Day/Night(ICR), AWB, AGC, BLC, 2DNR
- 3.6mm fixed lens (2.8mm optional)
- Max. IR LEDs length 30m, Smart IR
- IP67, DC12V

DH-HAC-HFW1000S

Technical Specifications

Model	DH-HAC-HFW1000SP	DH-HAC-HFW1000SN
Camera		
Image Sensor	1/4" 1Megapixel CMOS	
Effective Pixels	1280(H)×720(V)	
Electronic Shutter	1/50s~1/100,000s	1/60s~1/100,000s
Video Frame Rate	25fps@720P	30fps@720P
Synchronization	Internal	
Min. Illumination	0.05Lux/F2.0, 0Lux IR on	
Video Output	1-channel BNC high definition video output/ CVBS standard definition video output (Can switch)	
Camera Features		
Max. IR LEDs Length	30m, Smart IR	
Day/Night	Auto(ICR)/Color/B/W	
Backlight Compensation	DWDR	
Noise Reduction	2D	
OSD Menu	Support	
Lens		
Focal length	3.6mm fixed lens (2.8mm optional)	
Angle of View	H: 60° (83.4°)	
Mount Type	M12	
General		
Power Supply	DC12V±25%	
Power Consumption	Max 3.8W	
Working Environment	-40°C~+60°C/ Less than 95%RH (no condensation)	
Transmission Distance	Over 800m via 75-3 coaxial cable	
Ingress Protection	IP67	
Dimensions(W×D×H)	Φ70mm×165mm	
Weight	0.35kg	
Material	Metal(body) + Plastic (sunshield)	

DH-HAC-HFW1000S

Dimensions (mm)

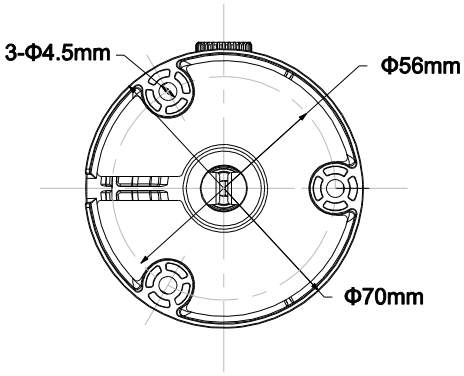

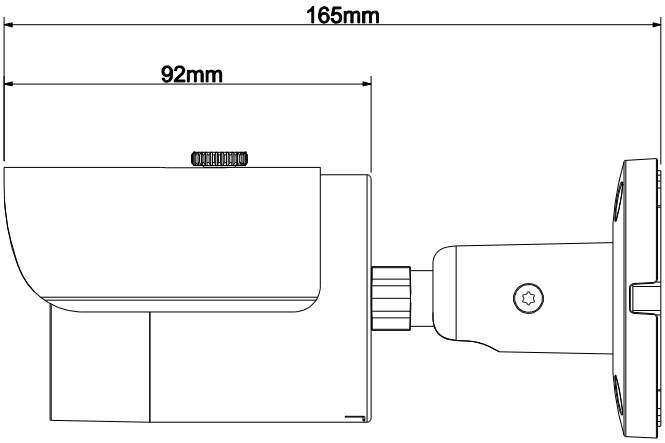

Accessories (optional)

PFA134	PFA150

Dahua Technology Co., Ltd.
1199 BinAn Road, Binjiang District, Hangzhou, China
Tel: +86-571-87688883
Fax: +86-571-87688815
Email:overseas@dahuatech.com
www.dahuatech.com

*Design and specifications are subject to change without notice.

© 2014 Dahua Technology Co., Ltd.